NO.	REVISIONS	DATE	DEVISER
1.			
2.			
3.			

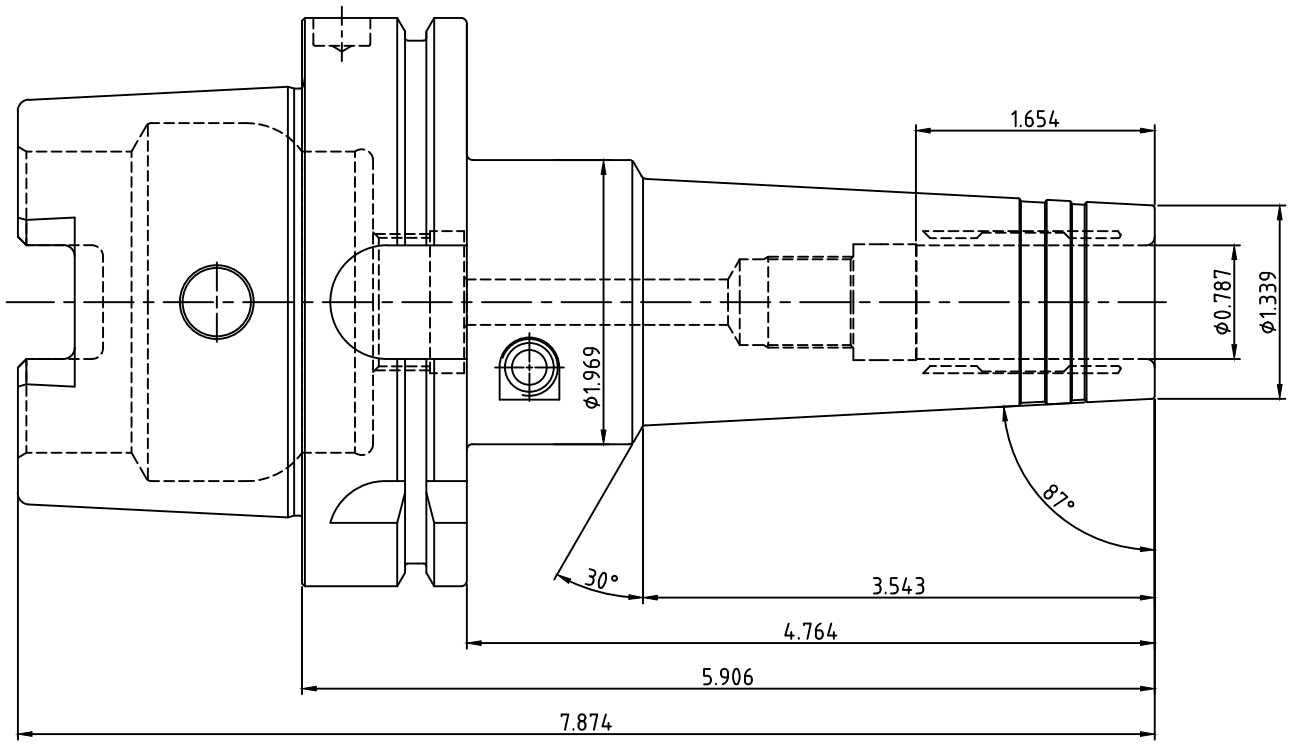

YG-1 CO., LTD.	DESCRIPTION		
	HSK100A-HMC0.79(20)-5.91(150)		
	EDP No.	WR210HMC	SCALE 1 : 1