NO.	REVISIONS	DATE	DEVISER
1.			
2.			
3.			

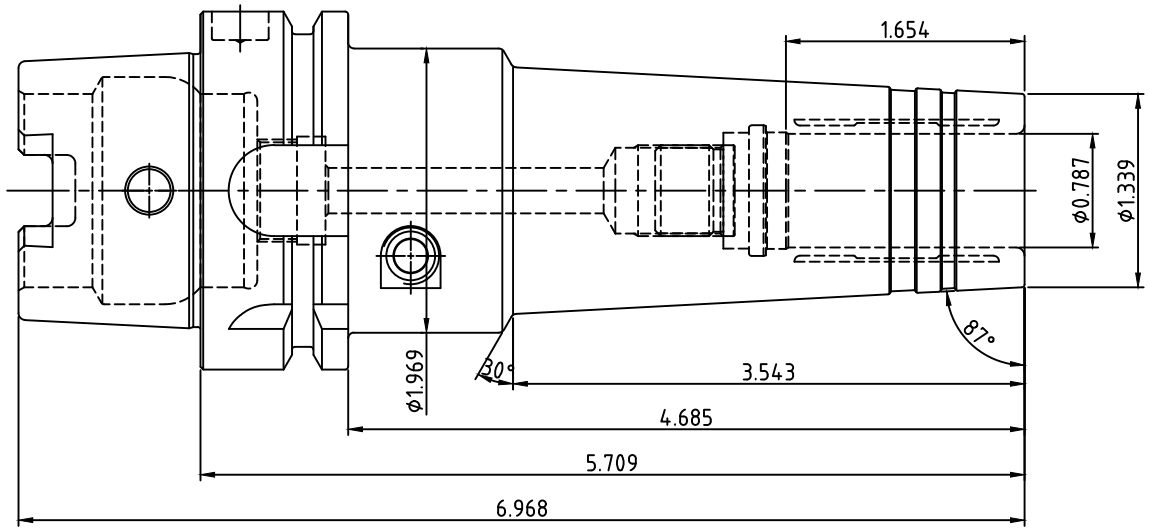

YG-1 CO., LTD.	DESCRIPTION		
	HSK63A-HMC0.79(20)-5.71(145)		
	EDP No.	WQ110HMC	SCALE 1 : 1