| NO. | REVISIONS | DATE | DEVISER |
|---|---|---|---|
| 1. | | | |
| 2. | | | |
| 3. | | | |

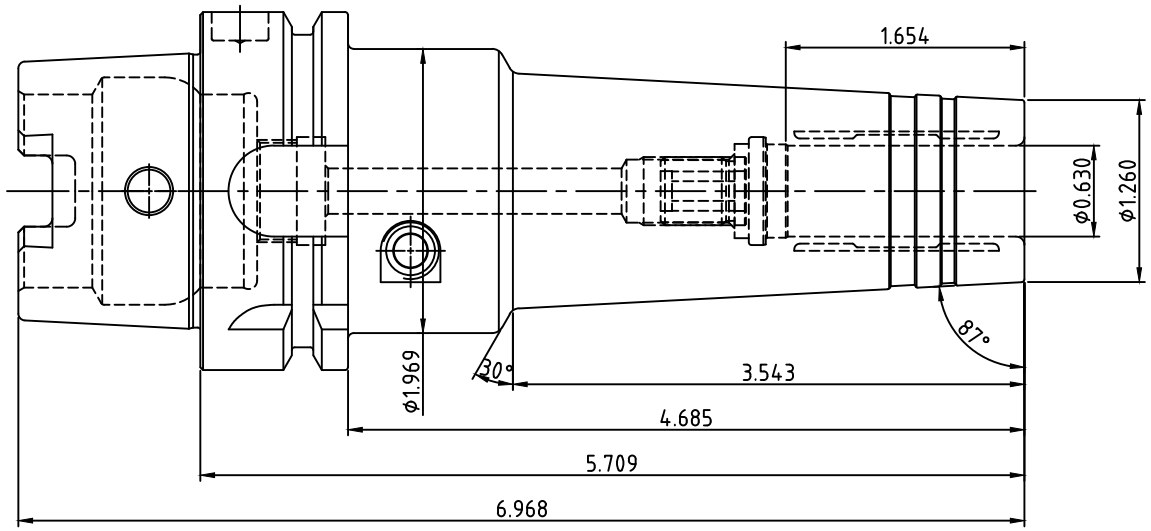


YG-1 CO., LTD.

DESCRIPTION

HSK63A-HMC0.63(16)-5.71(145)

EDP No. WQ108HMC SCALE 1 : 1