NO.	REVISIONS	DATE	DEVISER
1.			
2.			
3.			

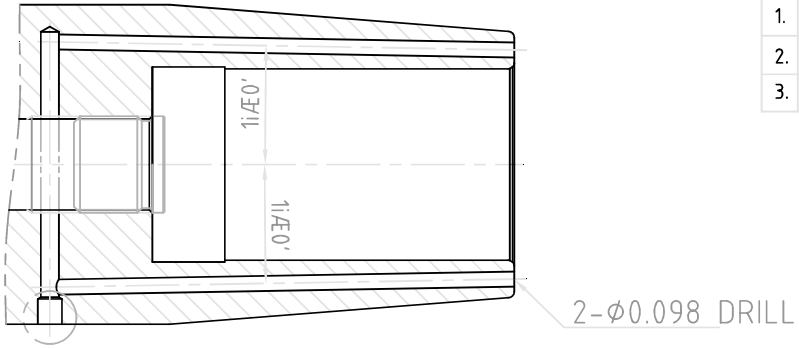

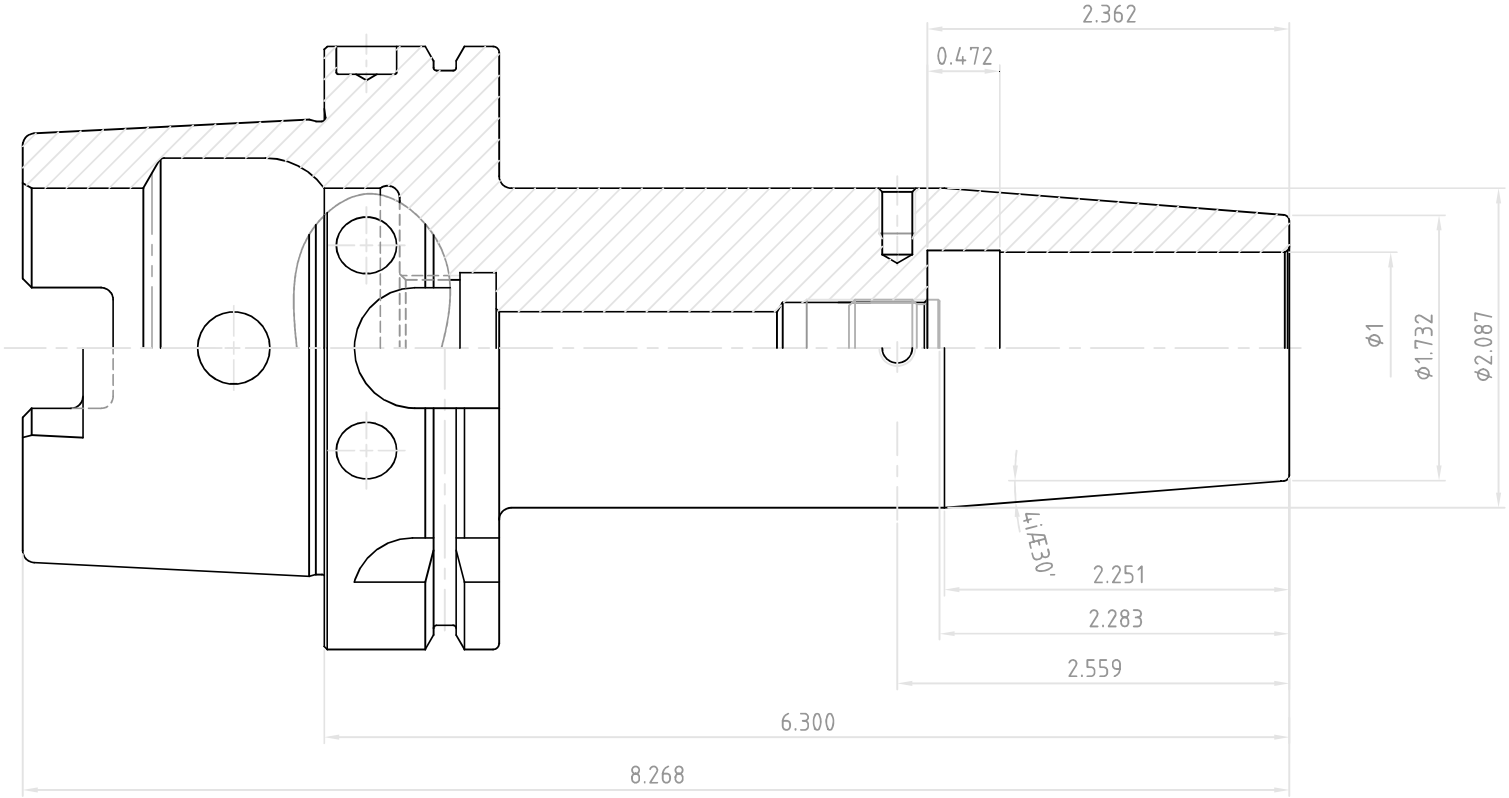

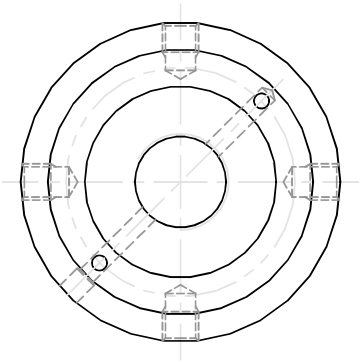

	SSK CONTROL NUMBER		
YG-1 CO., LTD.	HSK100A-SFH1 1/4(31.750)C-6.30(160)		
	EDP No.	VR046J	SCALE 1 : 1