NO.	REVISIONS	DATE	DEVISER
1.			
2.			
3.			

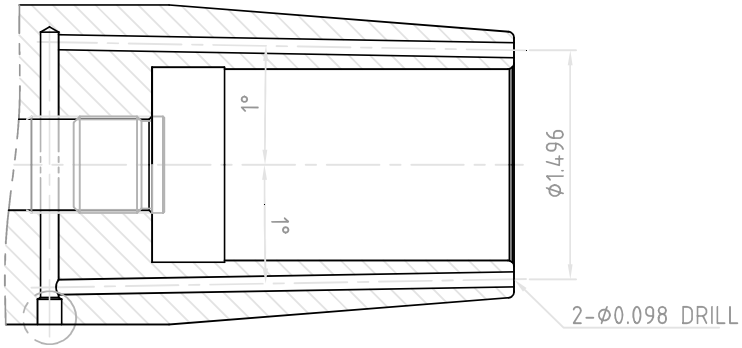

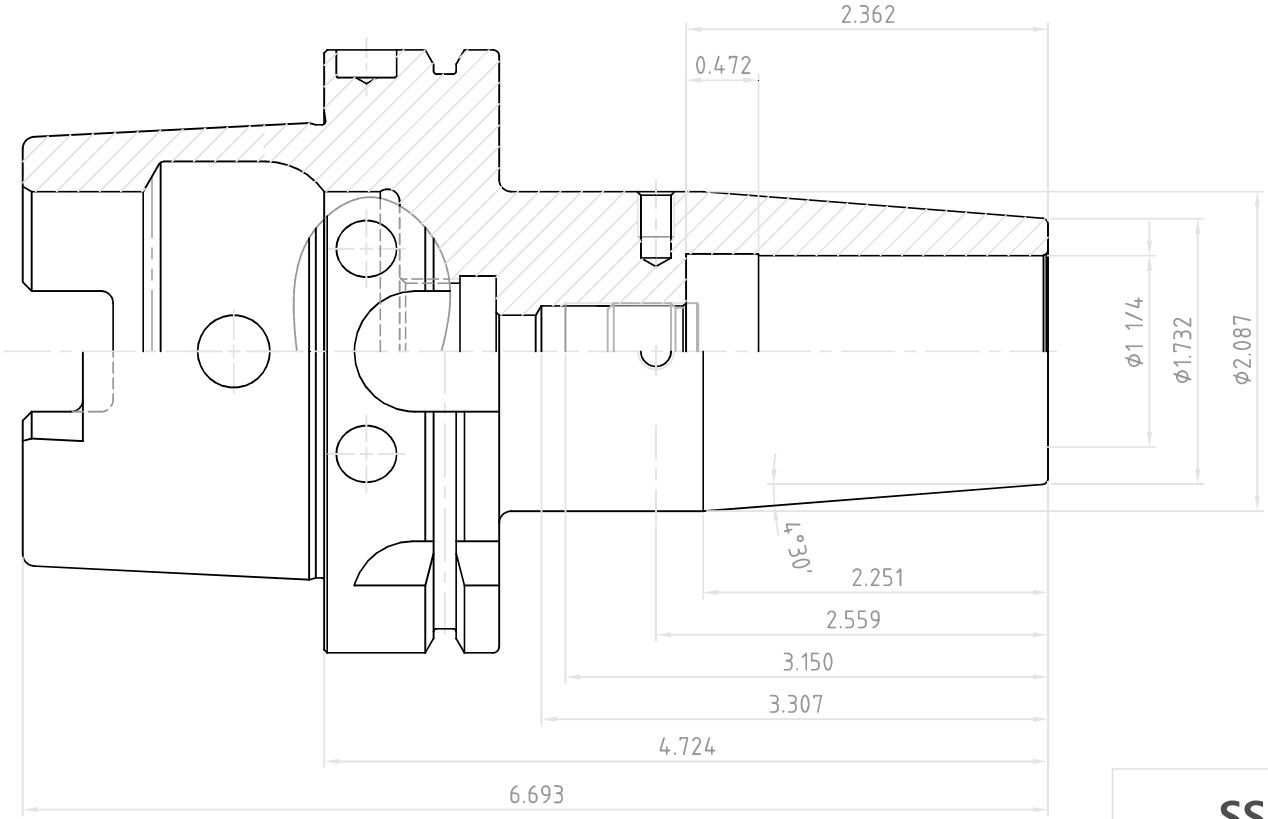

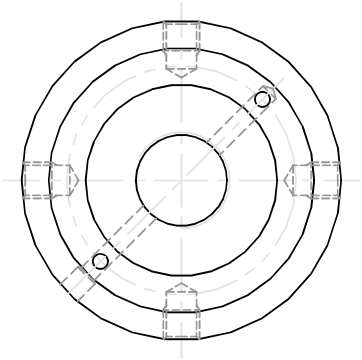

SSK
SSK TOOL CO.,LTD.

SSK CONTROL NUMBER

HSK100A-SFH1 1/4(31.7500)C-4.724(120)

EDP No. VR044J SCALE 1 : 1