NO.	REVISIONS	DATE	DEVISER
1.			
2.			
3.			

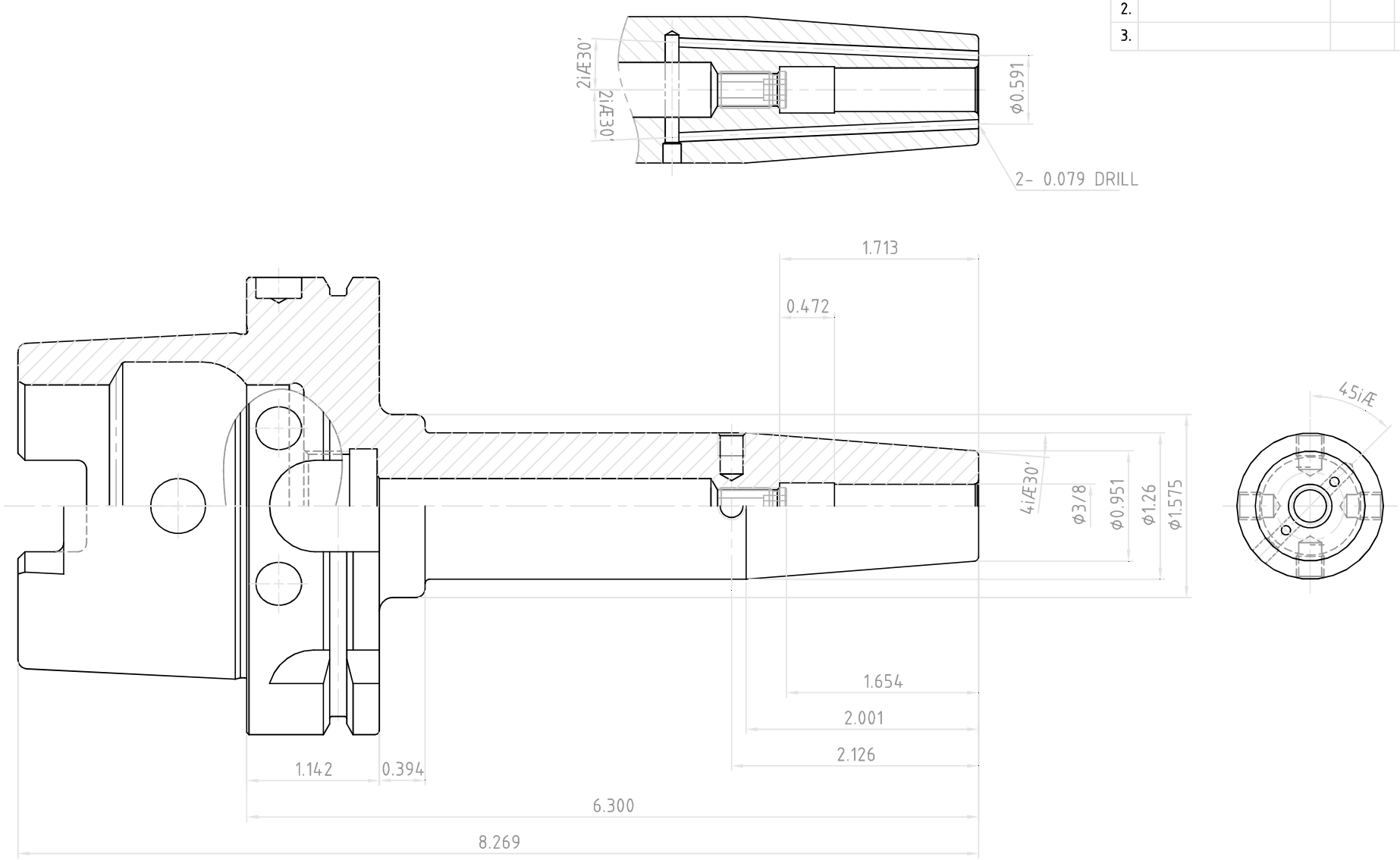

YG-1 CO., LTD.	SSK CONTROL NUMBER	
	HSK100A-SFH3/8(9.525)C-6.30(160)	
	EDP No. VR026J	SCALE 1 : 1