NO.	REVISIONS	DATE	DEVISER
1.			
2.			
3.			

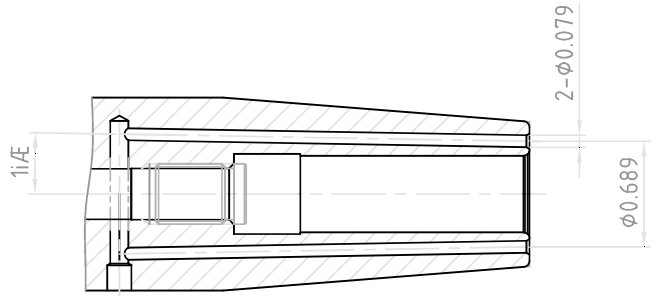

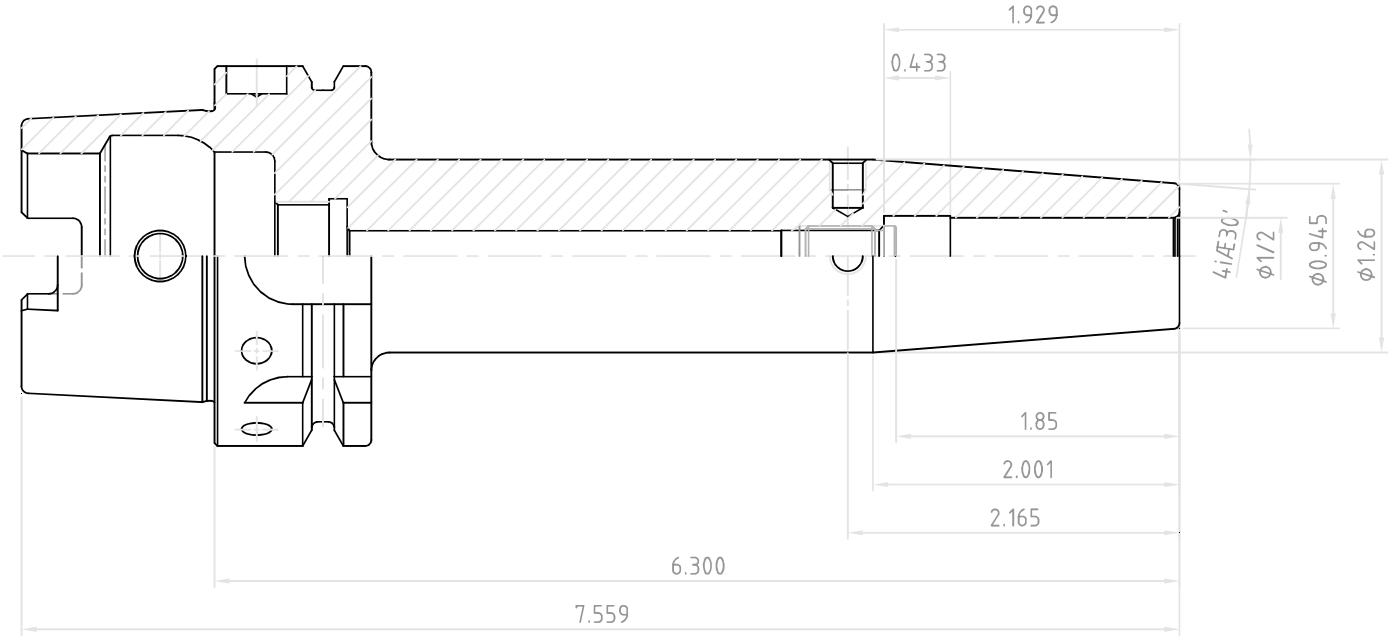

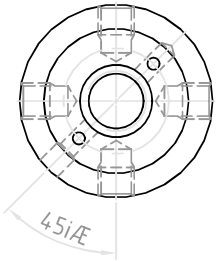

YG-1 CO., LTD.	SSK CONTROL NUMBER		
	HSK63A-SFH1/2(12.700)-6.300(160)		
	EDP No.	VQ034J	SCALE 1 : 1