NO.	REVISIONS	DATE	DEVISER
1.			
2.			
3.			

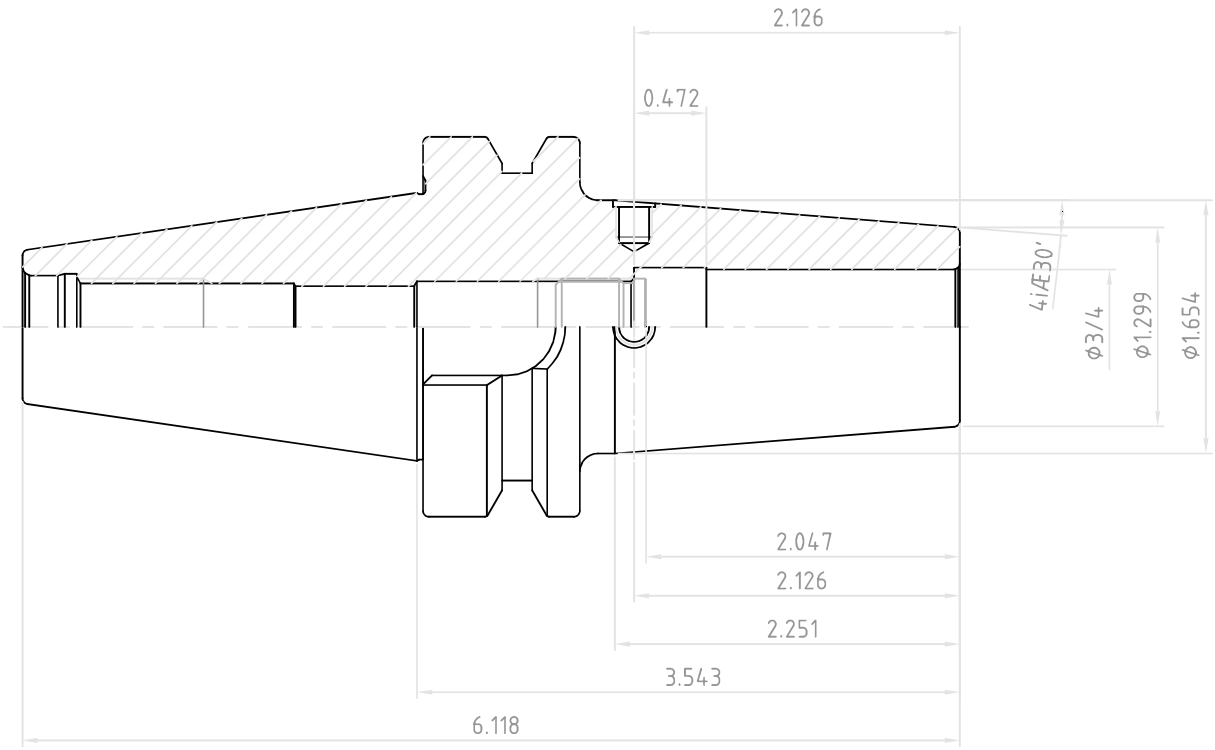

	SSK CONTROL NUMBER		
YG-1 CO., LTD.	CBT40-SFH3/4(19.050)-3.543(90)		
	EDP No. VE040	SCALE	1 : 1