NO.	REVISIONS	DATE	DEVISER
1.			
2.			
3.			

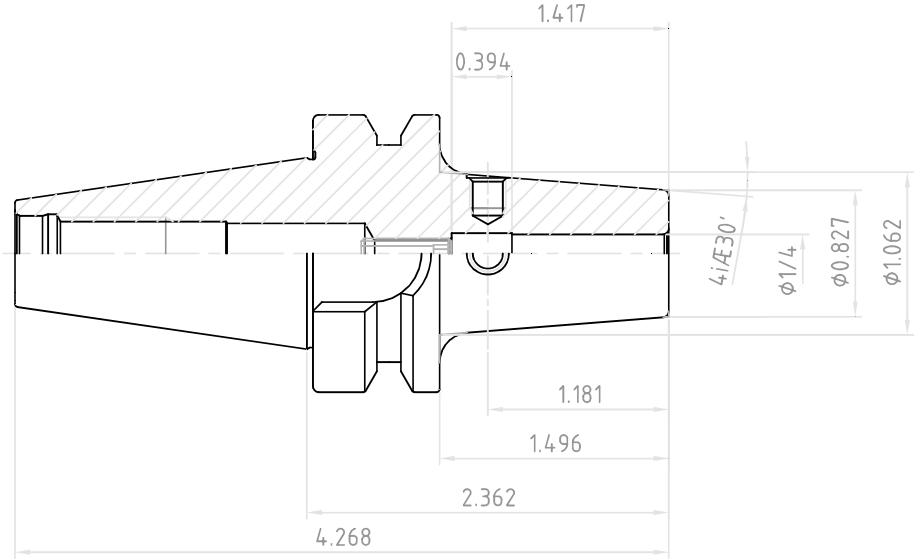

YG-1 CO., LTD.	SSK CONTROL NUMBER		
	CBT30-SFH1/4(6.350)-2.362(60)		
	EDP No. VD024	SCALE	1 : 1