NO.	REVISIONS	DATE	DEVISER
1.			
2.			
3.			

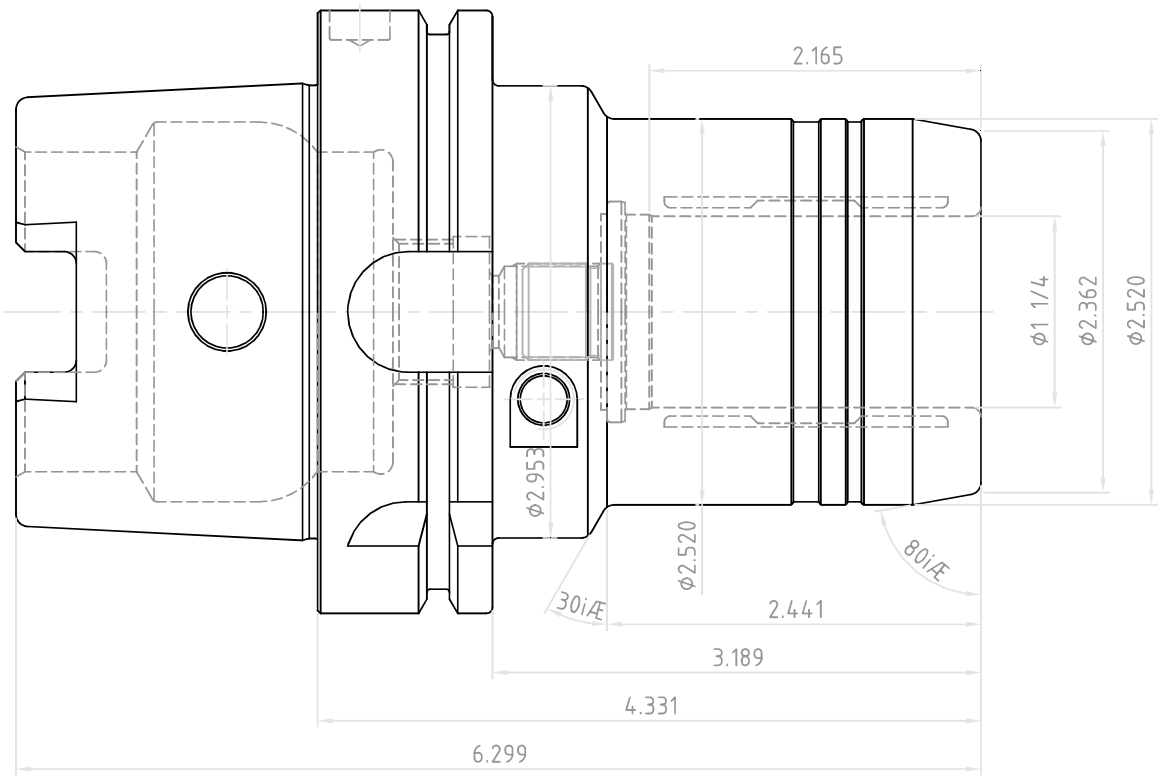

	DESCRIPTION		
YG-1 CO., LTD.	HSK100A-HC1 1/4(31.75)-4.33(110)		
	EDP No.	WR032	SCALE 1 : 1