NO.	REVISIONS	DATE	DEVISER
1.			
2.			
3.			

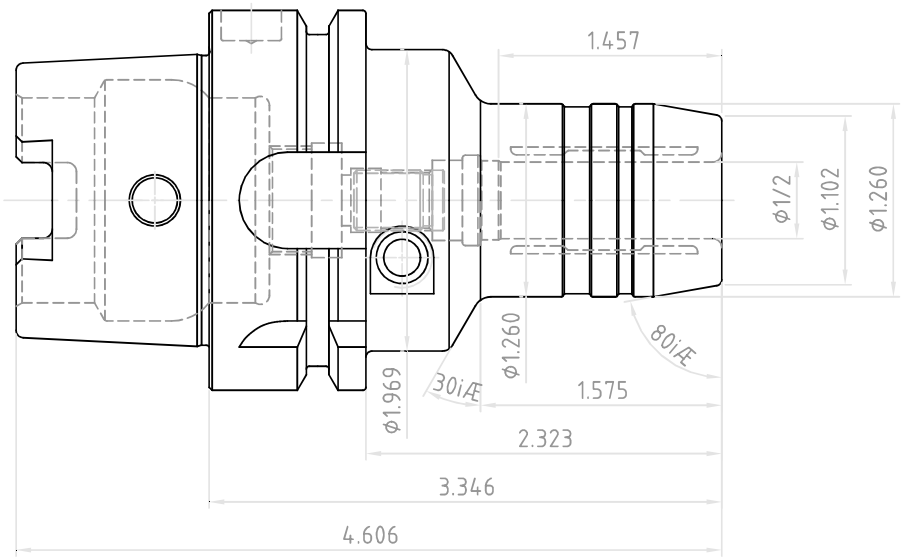

	DESCRIPTION		
YG-1 CO., LTD.	HSK63A-HC1/2(12.7)-3.35(85)		
	EDP No. WQ024	SCALE	1 : 1