NO.	REVISIONS	DATE	DEVISER
1.			
2.			
3.			

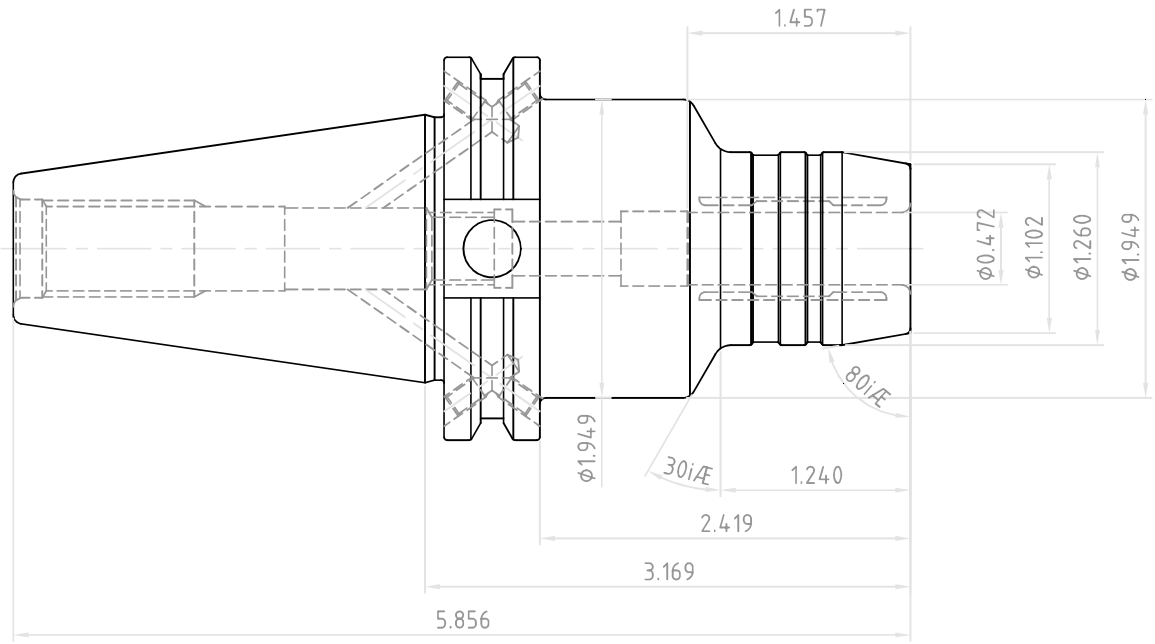

	DESCRIPTION		
YG-1 CO., LTD.	CAT40AD/B-HC0.47(12)-3.17(80.5)		
	EDP No.	WK100HCR	SCALE 1 : 1