NO.	REVISIONS	DATE	DEVISER
1.			
2.			
3.			

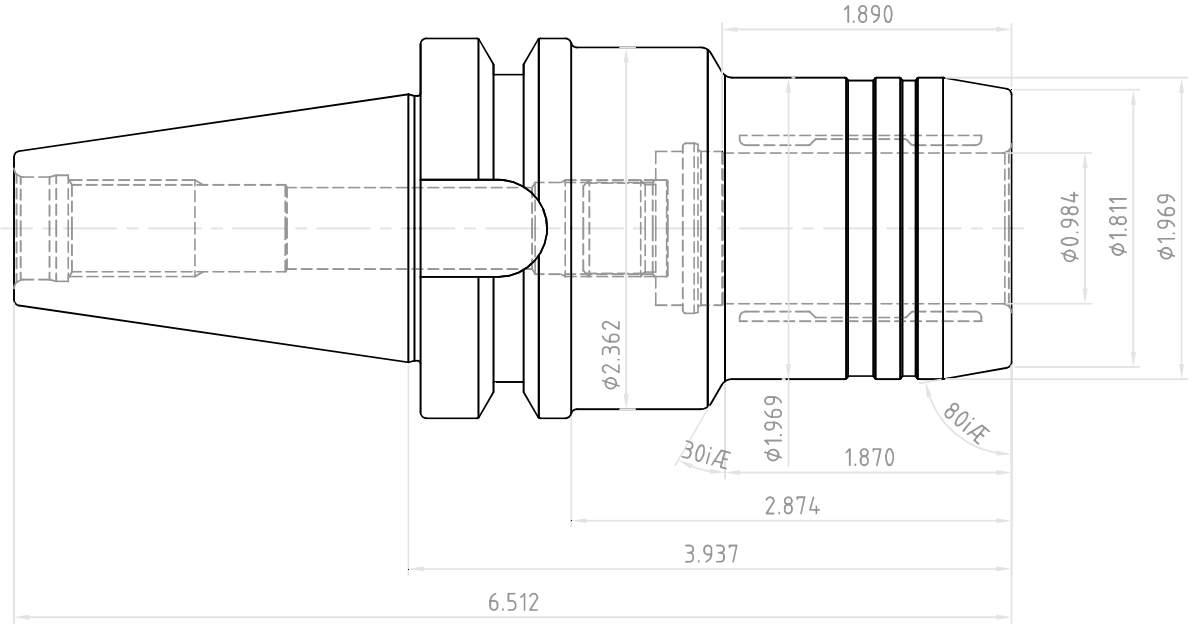

	DESCRIPTION		
YG-1 CO., LTD.	BT40AD/B-HC0.98(25)-3.94(100)		
	EDP No.	WH116	SCALE 1 : 1