NO.	REVISIONS	DATE	DEVISER
1.			
2.			
3.			

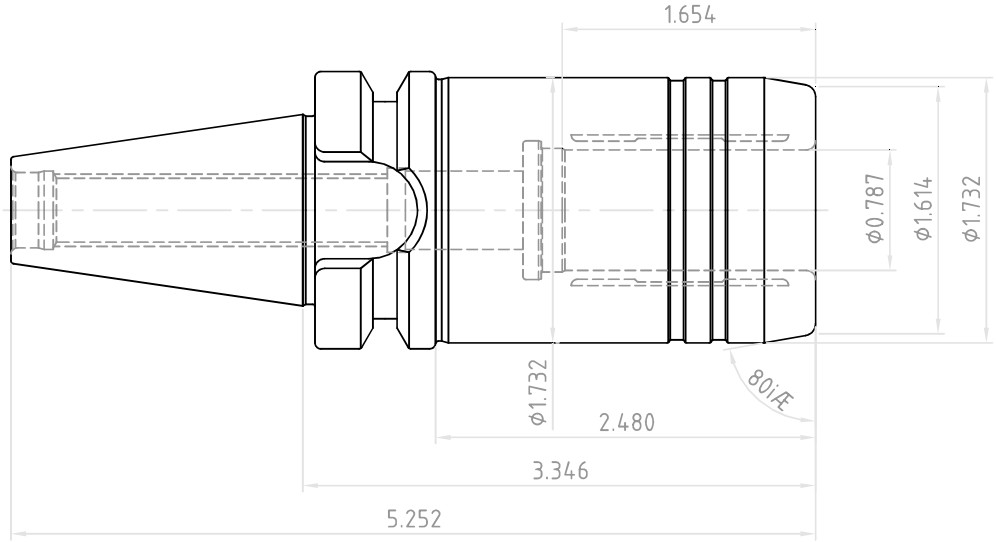

YG-1 CO., LTD.	DESCRIPTION		
	BT30-HCR0.79(20)-3.35(85)		
	EDP No.	WG102HCR	SCALE 1 : 1