| NO. | REVISIONS | DATE | DEVISER |
|---|---|---|---|
| 1. | | | |
| 2. | | | |
| 3. | | | |

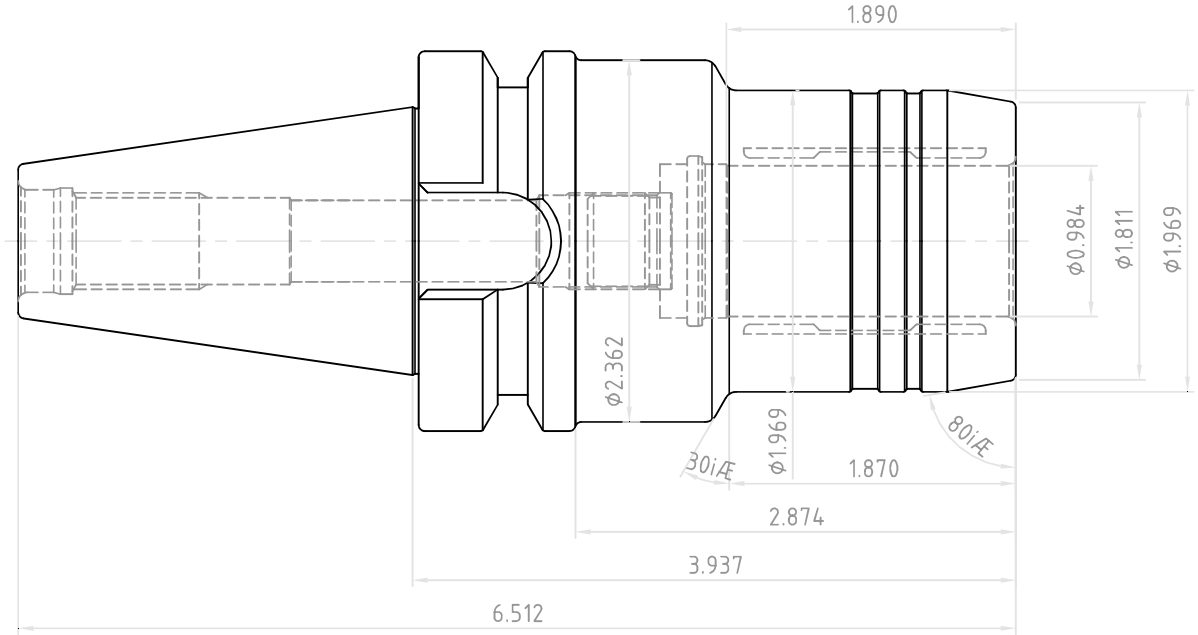


| | DESCRIPTION | | |
|---|---|---|---|
| YG-1 CO., LTD. | CBT40-HC0.98(25)-3.94(100) | | |
| | EDP No. | WE116 | SCALE 1 : 1 |