NO.	REVISIONS	DATE	DEVISER
1.			
2.			
3.			

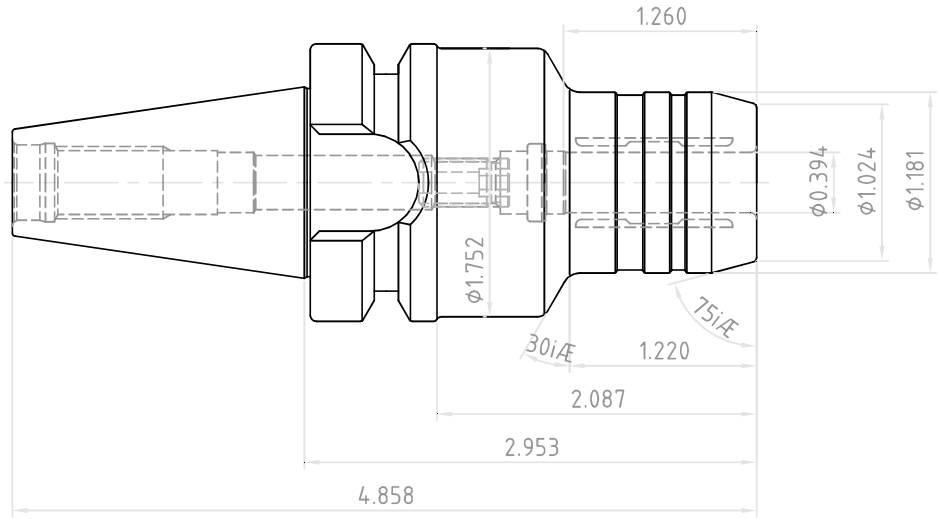

	DESCRIPTION			
YG-1 CO., LTD.	CBT30-HC0.39(10)-2.95(75)			
	EDP No.	WD104	SCALE	1 : 1