NO.	REVISIONS	DATE	DEVISER
1.			
2.			
3.			

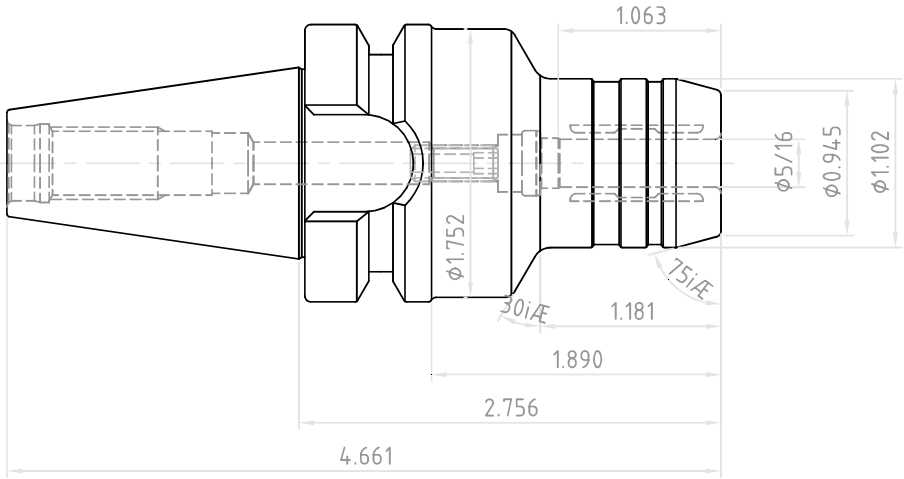

	DESCRIPTION		
YG-1 CO., LTD.	CBT30-HC5/16(7.93)-2.76(70)		
	EDP No.	WD022	SCALE 1 : 1